Contents

1.	Information on This Instruction	1
1.1	Symbols Used	2
1.2	Exclusion of Liability	2
1.3	General Information	2
2.	Safety Instructions	2
3.	Device Description	3
3.1	Types of Pressure Gauges	3
3.2	Exploded-view Drawing	3
3.3	Types of Diaphragm Seals	4
4.	Selection Criteria	4
4.1	Measuring Principles	4
4.2	Pressure Ranges	5
4.3	Error Limits	5
4.4	Operating Conditions	5
5.	Accessories	7
6.	Measuring Arrangements	9
7.	Installation	10
8.	Intended Use	11
9.	Electrical Extensions	12
10.	Use in Explosive Atmospheres	13
11.	Maintenance, Cleaning, Handling, Transport and Storage	13
12.	Dismounting and Disposal	14

1. Information on this Instruction

- The manual is aimed at specialists and semi-skilled personnel.
- Please read the instructions carefully before carrying out any operation and keep the specified order
- Thoroughly read and understand the information in chapter 2 “Safety Instructions”.

We'll show you!
Schmierer
Pressure and Temperature Gauges

Schmierer GmbH
Neuweg 2 • D-64521 Groß Gerau
Telephone: +49 (0) 6152 - 98015
E-mail: orders@schmierer.de

1.1 Symbols Used

This manual uses visual symbols to represent hazard warnings.

These should be understood as follows:

CAUTION! Failure to observe the instructions described can lead to property damage.

ATTENTION! Warning of potentially hazardous situations. Possible damage to property, persons or the environment.

WARNING! Warning of imminent danger to life.

Text sections with **explanations, information or notes.**

1.2 Exclusion of Liability

We assume no liability for damage or malfunctions caused by incorrect installation, improper use or failure to follow these operating instructions.

1.3 General Information

Carefully check the packaging material and the delivered units to ensure that they are complete and undamaged.

These operating instructions have been prepared with the utmost care. However, Not all applications and variations can be presented.

We will be happy to answer any questions regarding special applications, the devices, storage, assembly or other matters directly, see above contact details.

2. Safety Instructions

ATTENTION! Failure to observe the following instructions may result in property damage as well as serious physical injury.

Please read these operating instructions carefully before putting the devices into operation.

- For safe operation, competent and careful handling is indispensable.
- Improper use will invalidate our warranty.
- The staff responsible for handling the devices must be qualified or trained accordingly, and must be familiar with these operating instructions.
- Electrical connections may only be carried out by a qualified electrician.
- The corresponding national accident prevention / safety regulations and any internal company regulations must be observed.
- Defective or damaged units must not be used, they are to be checked and replaced if necessary. Units that have already been used must be taken out of operation immediately.
- Removal of or damage to type plates or similar indications also invalidate any warranty.
- The limit values specified in the technical data must be strictly adhered to in order to ensure the measuring accuracy and service life of the device.
- Excessive heat may result in the leakage of measuring fluid, which may cause significant dangers. After a fire has occurred, the devices must be checked and replaced if necessary.

3. Device Description

3.1 Types of Pressure Gauges

Bourdon Tube Pressure Gauge

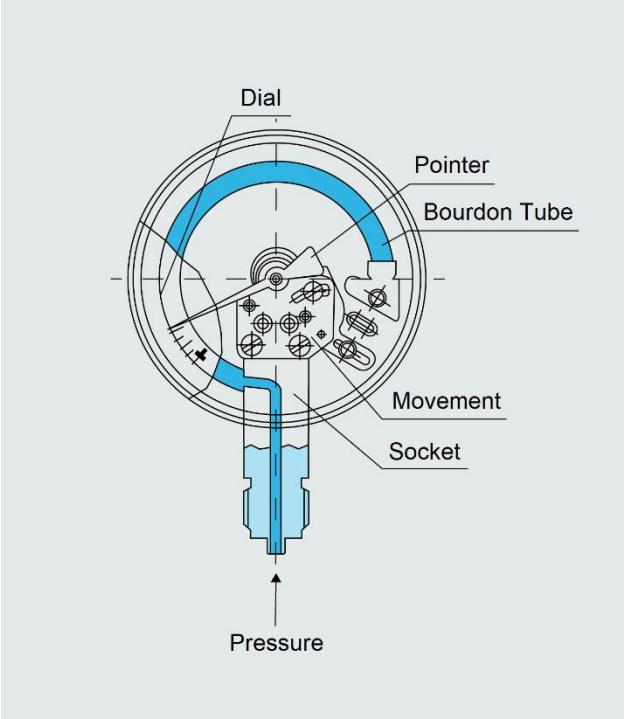

Diaphragm Pressure Gauge

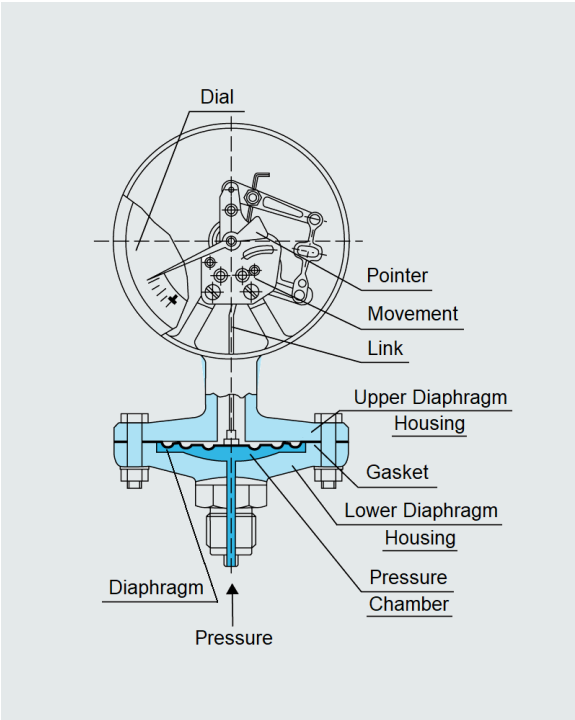

3.2 Exploded-view Drawing of Pressure Gauge with Solid-front Case, Blow-out Back (acc. DIN EN 837-1, S3)

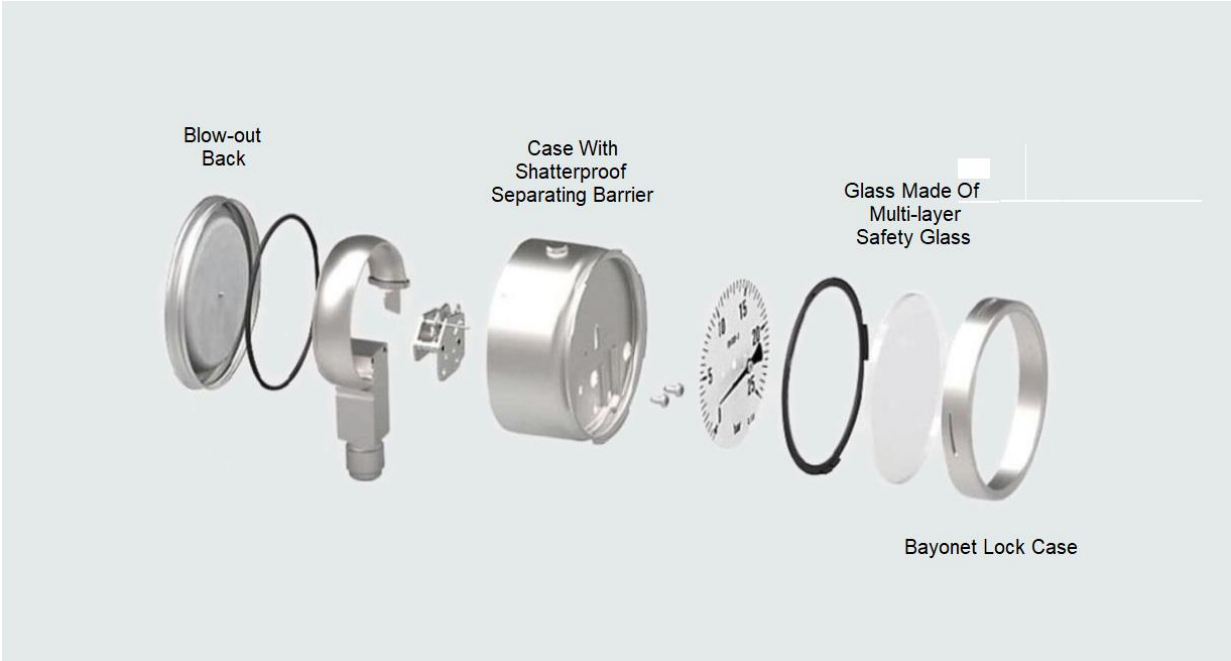

3.3 Types of Diaphragm Seals

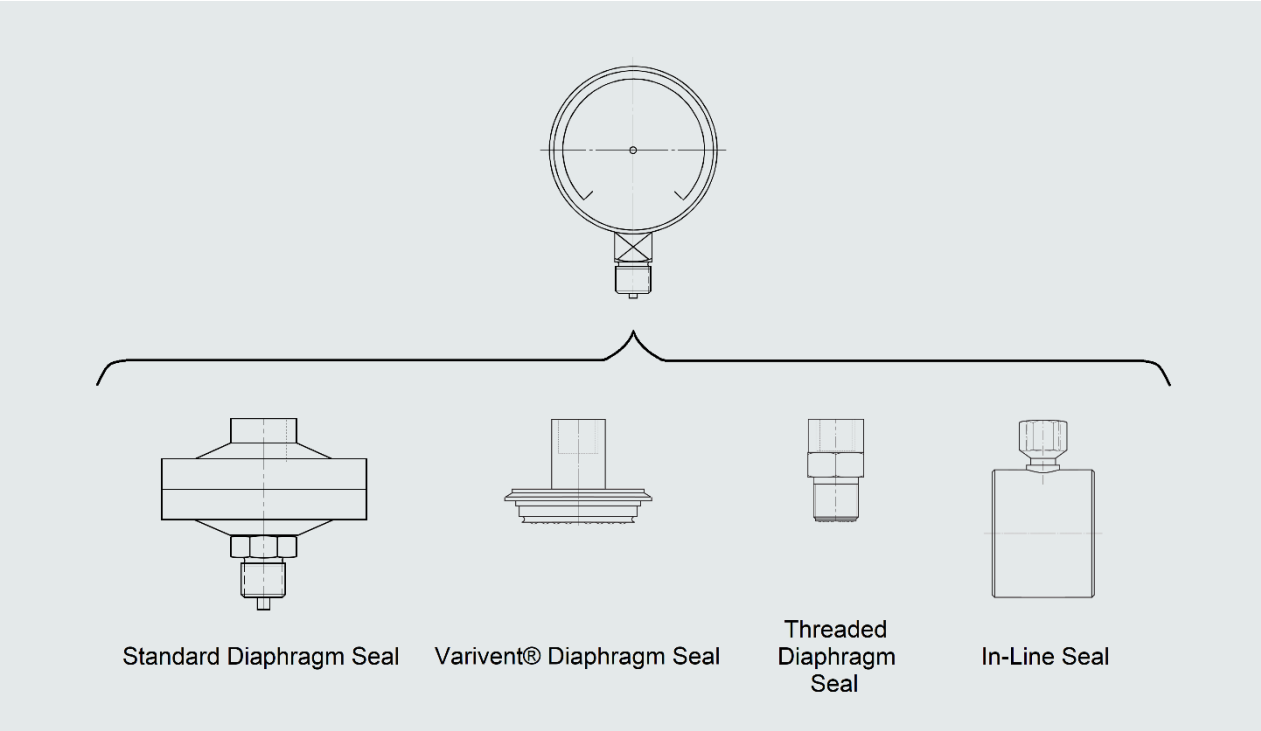

4. Selection Criteria

The operator must ensure that a suitable pressure gauge is selected. The following criteria are relevant: indicating range, type (material resistance to measuring substances, atmosphere and temperature, overpressure safety). The regulations applicable for the respective application as well as DIN EN 837-2 must be observed.

4.1 Measuring Principles

The pressure gauges described in this manual are equipped with measuring elements which deform elastically under the influence of pressure. This movement is transmitted to a pointer mechanism. Due to their robustness and simple handling, these devices are often used in technical pressure measurement.

Bourdon Tube Pressure Gauge:

The operating principle is based on a circular bent tube, which is firmly connected to a connecting socket at one end and sealed with an end piece at the other end. If the interior of the Bourdon tube is subjected to overpressure, it is stretched outwards; if it is subjected to underpressure, it is contracted inwards. This movement of the Bourdon tube end piece is the indicator for the pressure to be measured and is transmitted via a toothed segment to the pinion of the pointer mechanism, thereby converted into a rotary movement and indicated on the scale via the pointer.

Due to the relatively low restoring force of Bourdon tubes, the influence of additional devices such as drag pointers or limit switches on the display must be taken into account.

Bourdon tube movements are suitable for overpressure up to 1000 bar and underpressure down to -1 bar with gases, vapours and liquids. The indication accuracy is between ± 0.1% and ± 2.5% of the full scale value.

Diaphragm Pressure Gauge:

Diaphragm elements are circularly corrugated membranes. The pressure being measured is applied to one side of the diaphragm. The deflection of the diaphragm measures the pressure. Diaphragms have a relatively large restoring force. Additional devices therefore have less influence than with Bourdon tube pressure gauges. Due to the circular clamping of the diaphragm, it is also less sensitive to vibrations. By intercepting the measuring element, diaphragm elements are protected against high overload. They can be protected against corrosive media by covering them with foil. Diaphragm pressure gauges are also beneficial for highly viscous or crystallising media, as additional cleaning options can be realised by means of wide connection holes, open connection flanges or flushing holes.

Diaphragm movements can measure overpressure up to 40 bar and underpressures down to -1 bar of gases, vapours and liquids. The indication accuracy is ± 1.6% of the full scale value.

Capsule Pressure Gauge:

Capsule elements consist of two circularly corrugated diaphragms or alternatively of a diaphragm and a base plate, connected together pressure-tight at the edge. The measuring pressure is introduced in the center of one of the membranes and acts on the inside of the capsule. The resulting stroke movement serves as a measure of the pressure. Capsule pressure gauges are not suitable for liquid media.

Both negative and positive pressures up to 600 mbar can be measured with capsule movements. The indication accuracy is ± 1.6% of the full scale value.

4.2 Pressure Ranges

Generally, the operating pressure should be in the middle third of the indication range of the pressure gauge. The maximum pressure load should be 75% of the full scale value (static load) or 65% of the full scale value (dynamic load).

4.3 Error Limits

The error limits of pressure measuring instruments are specified in the following standards:

- DIN EN 837-1 (Bourdon Tube Pressure Gauges)
- DIN EN 837-3 (Capsule and Diaphragm Pressure Gauges)

Pressure gauges of classes 0.1 - 0.6 and above are preferred for accurate measurements in laboratories and workshops.

Pressure gauges of classes 1.0 and 1.6 are used on machines and in production plants.

Pressure gauges of classes 2.5 and 4.0 are used for monitoring tasks without special accuracy requirements.

4.4 Operating Conditions

The selection and installation recommendations in accordance with DIN EN 837-2 as well as the following notes in this manual must be observed when selecting pressure gauges. If devices are used which are not suitable for the operating conditions, serious damage may occur.

- **Medium Properties**

Pressure Curve

CAUTION! Material damage!
No rapid pressure changes or pressure shocks should be applied to the measuring element. Pressure shocks must not exceed the operating range of the device.

If necessary, overload safety protectors must be connected upstream (see chapter 5, Accessories). If the pressure changes more than 10 % of the full scale value per second, the readability of the measured value is affected. In addition, the service life of the devices is greatly reduced as a result. Axle damping must be provided in this case.

Throttling elements (throttling screws or adjustable shock absorbers) provide a strong reduction of the input cross-section, thus the pressure change in the measuring element is delayed. A throttle section (reduction of the measuring line cross-section) can also be installed. Both solutions have the disadvantage that they are susceptible to contamination. Damping elements on the movement only delay the movement of the pointer. Liquid-filled housings dampen the movement of the measuring element and reduce the wear of the moving parts.

Temperature

If the temperature of the medium being measured differs from the permissible operating temperature of the pressure gauge (see chapter 8, Intended use and DIN EN 83-1, -2 and -3), a sufficiently long measuring line, a gauge siphon or a diaphragm seal with capillary tube must be connected upstream of the device. The influence of device temperatures differing by +20 °C on the display must be taken into account.

Highly Viscous, Crystallising or Solid-containing Media

Pressure measurement of highly viscous, crystallizing or solid-containing media should be carried out using diaphragm pressure gauges or Bourdon tube pressure gauges with attached diaphragm seal (see chapter 5, Accessories).

Corrosive Media

If corrosive media can be kept away from the sensor by using release agents, standard instruments may be used.

The selection of the suitable material is otherwise mandatory. For this purpose, the operator must provide the manufacturer with all information on materials which are compatible with the medium under the respective measuring conditions (see DIN EN 837-2, 4.3). Due to the limited selection of materials for elastic measuring elements, diaphragm pressure gauges with protective linings made of resistant materials may have to be installed upstream of Bourdon tube pressure gauges.

Safety

Increased danger exists, for example, with gases or liquids under high pressure. If pressurized parts leak or burst persons standing in front of the device window shall not be injured by the media leaking out of the device. Pressure gauges with solid-front case (blow-out back), offer protection in this regard, see Figure 3.2.

For hazardous measuring substances, such as oxygen, acetylene, flammable or toxic substances, as well as refrigeration systems, compressors, etc., the relevant regulations must be observed.

CAUTION!
Liquid-filled pressure gauges must have a blow-out device according to DIN EN 837-1, 9.7 (versions S1 - S3 according to DIN EN 837-1).

- **Ambient Influences**

Vibrations

If vibration of the instrument cannot be avoided by appropriate installation, instruments with axle-damped pointer mechanism or liquid filling must be used.

Ambient Temperature

The error limit specified on the scale applies at a reference temperature of +20 °C. Differing temperatures have an effect on the display.

The magnitude of the influence depends on the measuring principle (see chapter 4.1).

When used outdoors, suitable devices must be selected or protective measures must be taken, for example, to prevent the device from freezing at temperatures below 0 °C. With liquid-filled instruments, the viscosity of the filling liquid increases as the ambient temperature drops. This considerably delays the display.

The ambient temperature must also be taken into account with regard to the maximum permissible operating temperature of the device.

Corrosive Atmosphere

When used in corrosive atmospheres, suitable housings and components made of resistant materials should be seleceted. Special surface treatments are also provided for external protection.

5. Accessories

Shut-off Valves for Pressure Gauges

It is recommended to install a shut-off valve between the pressure tapping point and the pressure gauge. This allows the measuring device to be replaced and the zero point to be checked while the system is running. Depending on the intended use, cocks or valves are used.

Cocks have three positions:

- Ventilation:
  The supply line is closed, the measuring is connected to the atmosphere.
  Zero point check is possible.
- Operation:
  The supply line is open, the measuring element is under pressure.
- Blow-out:
  The supply line is open, the medium escapes into the atmosphere. The measuring element is not in use.

Valves usually have a venting screw between the valve seat and the pressure gauge (e.g. according to DIN 16 270 / 271).

ATTENTION! The ventilation of the atmosphere must be arranged in a way that no one can be endangered by escaping medium.
Potential environmental damage must be avoided. In certain applications, the shut-off valves must have a test connection, so that the pressure gauge can be checked without dismantling.

Gauge Holder Bracket

A suitable gauge holder is to be provided if the measuring line is not rigid enough for a vibration-free installation of the pressure measuring instrument.

Siphons

Shut-off valves and pressure gauges must be protected against heat by hot measuring media (e.g. water vapor) by means of sufficiently long measuring lines or siphons.

Diaphragm Seals

In the case of hot, aggressive, highly viscous or crystallizing media, diaphragm seals can be installed in front of Bourdon tube pressure gauges to prevent these media from entering the measuring element.

The pressure is transmitted to the measuring element by a neutral liquid. This fluid is selected according to the measuring range, temperature, viscosity and other influences.

Attention must be paid to the compatibility of the filling liquid with the medium.
There are different diaphragm seal designs (see chapter 3.3), the most common variant being the diaphragm seal.

In the case of inline and flange diaphragm seals, the pressure gauge must be mounted on the diaphragm seal by the manufacturer to suit the respective installation position.

Diaphragm seal and measuring instrument must not be separated from each other.

In addition, possible errors must be taken into account which may occur when a diaphragm seal is connected upstream of the measuring device.

Overload Safety Protectors

CAUTION! If, for operational reasons, the indication range must be selected smaller than the maximum operating pressure, the gauge can be protected against damage by connecting an overload safety protector upstream.

In the event of a pressure shock, the protective device closes immediately; in the event of a slow pressure rise, it closes only successively. Therefore, the closing pressure to be set depends on the time course.

However, the function of the protection device can be impaired or rendered ineffective by highly viscous or contaminated media.

Capsule and diaphragm pressure gauges can also be manufactured as devices with overpressure protection (3, 5- or 10-fold).

6. Measuring Arrangements

General Remarks:
See VDE/VDI 3512 sheet 3 for proven measurement arrangements and suggestions for components. The following table contains an overview of possible measuring arrangements:

State of the Medium	Liquid			Gaseous		
State of the Filling In the Measuring Line	Liquid	Partly Gas Emitting	Completely Gas Emitting	Gaseous	Partly Condensed (Moist)	Completely Condensed
Examples	Condensate	Boiling Liquids	"Liquid Gases"	Dry Air	Moist Air	Steam
a) Pressure Gauge Higher Than Measuring Point	1 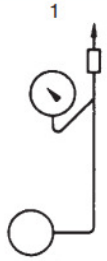	2 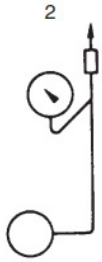	3	4	5	6
b) Pressure Gauge Lower Than Measuring Point	7 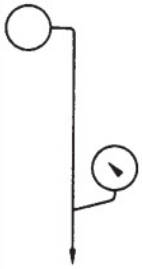	8 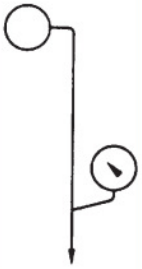		9 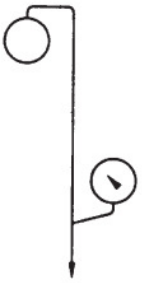	10 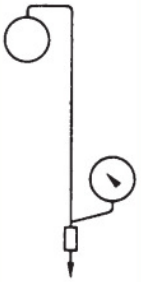	11 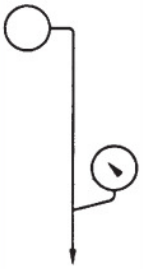
The arrangements 3, 4, 5, 7, 8 and 11 are to be preferred.						

Pressure Measuring Port

The pressure measuring port must be installed in a place, where there are undisturbed flow and uniform measuring conditions. The orifice for the pressure extraction should be sufficiently large and closed off by a shut-off device.

Measuring Line

The measuring line connects the measuring port with the pressure gauge. The line must have a sufficiently large inner diameter to be able to avoid blockages.

The measuring line must be laid with a constant incline (1:15 is recommended). In the case of gaseous media, drainage must be provided at the lowest point, and in the case of highly viscous liquids, venting must be provided at the highest point.

In the case of gases or liquids containing solids, separators must be provided which can be separated from the system and drained during operation by means of shut-off valves.

Shut-off Valves on the Measuring Device

Shut-off valves on the pressure gauge are used to check the zero point or to change the measuring device while the system is running (see chapter 5, Accessories).

Pressure Gauge

The pressure gauge is to be mounted vibration-free and should be arranged to ensure good readability.

When reading the device, parallax errors must be avoided. Any blow-out devices on the measuring device must be protected against blockage (see DIN EN 837-1, 9.7). The arrangement of the pressure gauge must be such that it is impossible to exceed or fall below the permissible operating temperature (see chapter 4.4, Operating conditions and chapter 8, Intended use). The influence of convection and thermal radiation must be taken into account. Pressure gauges whose measuring elements are filled with water or a water mixture must be protected against freezing. Generally, the pressure gauge is mounted with the scale vertically. Otherwise, the position sign according to DIN EN 837 applies on the scale.

A difference in height between the measuring port and the pressure gauge causes a shift in the lower range value if the medium in the measuring line has a different density than the ambient air. The shift of the lower range value Δp results from the density difference (ρM - ρL) and the height difference Δh: **10-5 - (ρM - ρL) g - Δh**

Δ = shift of measuring start, (bar)
ρM = density of the medium, (kg / m³)
ρL = density of the air (1.205 at 20 °C), (kg / m³)
Δh = difference in height, (m)
g = gravitational acceleration, (m / s²)
(medium gravitational acceleration 9,81 m / s²)

If the pressure gauge sits higher than the measuring port, the display is decreased by Δp and if it sits lower, it is increased by Δp.

7. Installation

Pressure gauges should only be mounted by trained personnel. For the measuring arrangement, see chapter 6.

When installing and removing the pressure gauges, they must not be held by the case, but by the wrench flat of the spring carrier.

Make sure that the appropriate medium connection has been selected (nominal size, suitable sealing strip if necessary, etc.)

In order to bring the measuring device into a position in which proper readability is ensured, it must be mounted with a clamping sleeve or union nut in the case of threaded connections. In the case of flange connections, the measuring device is placed on the counter flange, the flanges being connected to each other with suitable screws. Ensure that the screws are tightened firmly.

The connections must be tight. It is therefore essential to use suitable gaskets for the connection, which are made of material resistant to the medium. For example, flat gaskets to DIN EN 837-1 or profile gaskets should be used on the sealing surface to seal pressure measuring connections with cylindrical threaded journals, or sealing lenses for corresponding high-pressure connections.

In the case of conical threads (e.g. NPT threads), sealing in the thread is achieved by additional sealing materials, such as PTFE tape (see DIN EN 837-2).

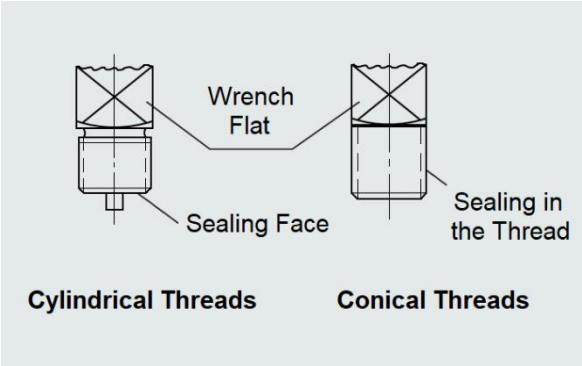

For pressure gauges with pressure relief opening Ø 13 mm at the top of the case circumference, it is recommended for measuring ranges below 6 bar to make the device ventilable by cutting off the nipple at the filling plug to compensate the internal pressure.

If the device is located lower than the pressure tapping point, the measuring line must be flushed well to remove foreign bodies before commissioning.

When pressing off pipelines or containers, the device must not be loaded higher than indicated by the limit mark ▼ on the scale, or the limit of use specified for the device must not be exceeded under static load (see chapter 8, Intended use).

In the case of diaphragm pressure gauges, the clamping screws of the upper and lower flanges must not be loosened.

ATTENTION! Before removing the pressure gauge, the measuring element must be depressurized.
The measuring line must be depressurized if necessary. Residual media contained in dismantled pressure gauges can endanger personnel, equipment and the environment. Appropriate precautionary measures must be taken.

8. Intended Use

CAUTION! Shut-off devices must be opened slowly to avoid pressure surges during start-up.

Application Range

On many pressure gauges, the application range for static load is marked by a limitation mark ▼ on the scale (see DIN EN 837-1, 837-3).

Bourdon tube pressure gauges of nominal sizes 100, 160 and 250 can be loaded up to the full scale value under static load. With alternating load, only 0.9 times this pressure is permissible as a peak value. For the measuring ranges 0-2500 bar and 0-4000 bar, a maximum of ⅔ of the full scale value is permissible. Bourdon tube pressure gauges are overload-proof up to 1.3 times the full scale value (0-2500 and 0-4000 bar gauges can only be loaded up to the full scale value). Bourdon tube pressure gauges of nominal sizes 35, 40, 50, 60, 63 and 80 can be loaded up to ¾ of full scale under static load, and up to a maximum of ⅔ of full scale under alternating load, for short periods.

Diaphragm pressure gauges are overload-proof up to 5 times the full scale value (in special versions also higher), but not more than 40 bar.

Capsule pressure gauges can also be overloaded up to full scale under static load, and up to 0.9 times full scale under alternating load. They are 1.3 times overpressure safe (in special design also higher).

Zero Point Check

To check the zero point during operation, close the shut-off valve required for this purpose (see chapter 5, Accessories) and release the pressure from the pressure gauge. The pointer must be within the range marked ⊥ at the zero point.

If the pointer is outside this range, a permanent deformation of the measuring element can generally be assumed, which must be checked more closely to prevent accidents due to measuring errors. Therefore, the device should be replaced and, if necessary, sent in for inspection and repair.

Indication Check

If a indication check is required during operation, the pressure gauge must be disconnected from the process and subjected to test pressure via the shut-off valve with test connection required for this purpose (see chapter 5, Accessories). The error limits according to DIN EN 837-1 or 837-3 apply.

Temperature Resistance

Do not exceed the permissible operating temperatures of the pressure gauge.

In general, the temperature resistance or permissible operating temperature is max. -40°C to +60°C (see DIN EN 837-1 and 837-3), whereby unfilled devices with brazed Bourdon tube can withstand medium temperatures up to +100°C and devices with shielded arc welding Bourdon tube in CrNi steel cases can withstand medium temperatures up to +200°C.

Please note: These specifications only refer to the temperature resistance of the materials and the soldered joints or weld seams. Information on indication errors due to deviations from the reference temperature must be observed!

Cleaning Temperature

The permissible operating temperature of the pressure gauge (see above) must not be exceeded even when rinsing the measuring line.

Das Gerät muss gegebenenfalls abgesperrt oder ausgebaut werden.

9. Electrical Extensions

Mounting and electrical connections should only be carried out by qualified personnel.

Devices with electrical attachments are marked with a nameplate. This indicates how the electrical connection is to be carried out. The load limits must be observed. Exceeding these limits can lead to damage.

National and international safety regulations (e.g. VDE 0100) must be observed during installation, commissioning and operation of the devices.

Cable diameters must match the nominal diameters of the sealing inserts. Screw connections must be tightened firmly. Confirmed protection classes are only given If this is the case. Centrally arranged fastening screws must be hand-tightened for versions with junction box, plug connector or right-angle plug.

For pressure transmitters, to maintain the electromagnetic compatibility (EMC), only shielded cable is to be used for the connection, the shield of which is to be connected to the case or the ground terminal of the right-angle plug.

In the case of devices with magnetic contact, it must be ensured that the CE marking in accordance with the EMC Directive only applies if the switching frequency does not exceed 5 switching cycles per minute.

If required, suitable switch amplifiers or multifunctional relays should be used (e.g. for devices with inductive contacts). The corresponding operating instructions must be observed.

10. Use in Explosive Atmospheres

General Information

Pressure gauges are mechanical pressure measuring devices and have no potential ignition sources when operated as intended. Stainless steel versions with a laminated glass window are suitable for use in category 2 and 3 areas according to directive ATEX 2014/34/EU.

Only pressure gauges with attached, type-approved deflagration volume protection are suitable as category 1 devices (e.g., installation in zone 0). This protection system prevents a flame penetration during deflagration of explosive vapor-air or gas-air mixtures of explosion groups IIA, IIB and IIC in an upstream volume of max. 0.2 l.

To avoid heating of the measuring elements of Bourdon tube pressure gauges, dynamic loading with gaseous media is not permitted!

Marking for the Explosion Hazardous Area

Pressure gauges without limit switches for use in hazardous areas are marked as follows:

Example: Bourdon Tube Pressure Gauge Type RU100K, Manufacturer Schmierer GmbH

Type RU Contact	CE Ex II 2 GD c
PTB 17 ATEX D044	

11. Maintenance, Cleaning, Handling, Transport and Storage

CAUTION! Material damage and loss of warranty.
Modifications or interventions on the device by the customer can lead to damage to important parts or components. Such interventions will invalidate any warranty or manufacturer's responsibility! Therefore, never modify the device and do not carry out any repairs yourself.

Maintenance

Pressure gauges are generally maintenance-free.

Repairs must only be carried out by the manufacturer.

Cleaning

Before sending in a device for repair, the parts in contact with the medium must be carefully cleaned of the medium, especially in case of hazardous media.

A description of the medium or a contamination declaration should be attached to the repair order.

Handling and Transport

The device contains sensitive components and must therefore be handled with the greatest possible care.

It is also essential to protect the devices from mechanical shocks or impacts during transport, installation and operation in order to prevent any impairment of the measuring properties.

Special attention should be paid to the following aspects:

- Do not throw the devices.
- Carefully remove the devices from their packaging.
- Avoid shocks caused by strong impacts on surfaces or with objects.
- For transport, use suitable packaging (ideally the original packaging) to adequately protect the equipment from shock.
- The packaging must be provided with appropriate transport instructions.

Storage

For storage until assembly, the devices must be kept in their original packaging and protected from damage by external influences.

If the devices are removed temporarily, for example to carry out a test, they must then be carefully repacked in the original packaging.

In general, the temperature limits of -40°C and +60°C must not be exceeded during storage (according to DIN EN 837-1 and 837-3).

12. Dismounting and Disposal

The instrument must be unpressurised before dismounting! Please remove the instrument completely from its application area.

Disposal

NO DOMESTIC WASTE!
The devices are made of different materials and must not be disposed of together with domestic waste.

Either send the devices to the local recycling plant or send them back to Schmierer GmbH.

Schmierer GmbH
Neuweg 2 • D-64521 Groß Gerau
Telephone: +49 (0) 6152 - 98015
E-mail: orders@schmierer.de